LDK® All Stainless Steel Bearing Units

SSUCT All stainless steel take up units,Setscrew locking



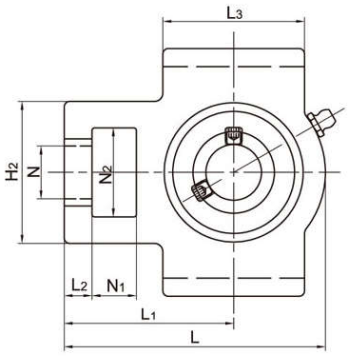

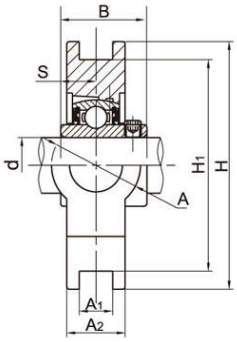

Unit No.	Shaft Dia d		Dimensions(mm)															Weight (kg)
	(in)	(mm)	N_1	L_2	H_2	N_2	N	L_3	A_1	H_1	H	L	A	A_2	L_1	B	S	
SSUCT204		20	16	10	51	32	19	51	12	76	89	94	32	21	61	31	12.7	0.79
SSUCT204-12	3/4																	
SSUCT205		25	16	10	51	32	19	51	12	76	89	97	32	24	62	34.1	14.3	0.84
SSUCT205-14	7/8																	
SSUCT205-15	15/16																	
SSUCT205-16	1																	
SSUCT206		30	16	10	56	37	22	57	12	89	102	113	37	28	70	38.1	15.9	1.32
SSUCT206-17	1-1/16																	
SSUCT206-18	1-1/8																	
SSUCT206-19	1-3/16																	
SSUCT206-20	1-1/4																	
SSUCT207		35	16	13	64	37	22	64	12	89	102	129	37	30	78	42.9	17.5	1.72
SSUCT207-20	1-1/4																	
SSUCT207-21	1-5/16																	
SSUCT207-22	1-3/8																	
SSUCT207-23	1-7/16																	
SSUCT208		40	19	16	83	49	29	83	16	102	114	144	49	33	88	49.2	19	2.52
SSUCT208-24	1-1/2																	
SSUCT208-25	1-9/16																	
SSUCT209		45	19	16	83	49	29	83	16	102	117	144	49	35	87	49.2	19	2.52
SSUCT209-26	1-5/8																	
SSUCT209-27	1-11/16																	
SSUCT209-28	1-3/4																	
SSUCT210		50	19	16	83	49	29	86	16	102	117	149	49	37	90	51.6	19	2.69
SSUCT210-30	1-7/8																	
SSUCT210-31	1-15/16																	
SSUCT210-32	2																	
SSUCT211		55	25	19	102	64	35	95	22	130	146	171	64	38	106	55.6	22.2	4.04
SSUCT211-32	2																	
SSUCT211-34	2-1/8																	
SSUCT211-35	2-3/16																	
SSUCT212		60	32	19	102	64	35	102	22	130	146	194	64	42	119	65.1	25.4	5.00
SSUCT212-36	2-1/4																	
SSUCT212-38	2-3/8																	
SSUCT212-39	2-7/16																	

Notes: 1.Upon request,available with plastic close cap(CC) or open cap(OC) at one end. Ordering example SSUCT204-12 CC.
2.Lubricated with food grade grease.