

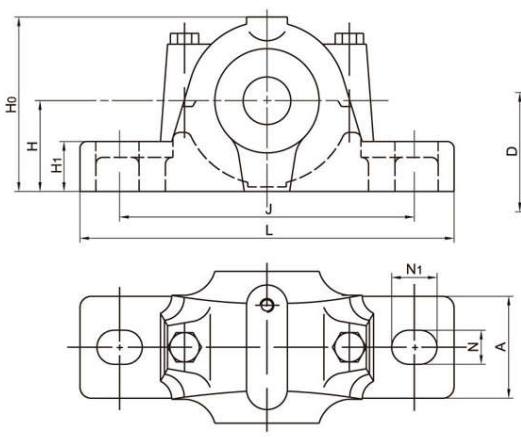

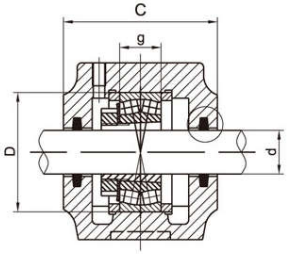

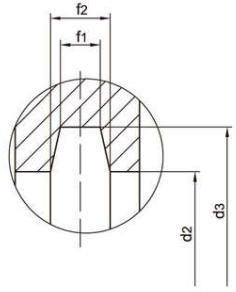

Housing No.	Shaft		Dimensions (mm)																Wt Kg	Bearing No		Adapter	Sleeve	Locating Ring	
	mm	in	D H_8	L	A	H_1	g	H	C	H_0	J	S	N	N_1	d_2	d_3	f_1	f_2						Number	QTY
SN505	20	¾	52	165	46	22	25	40	67	75	130	M12	15	20	21.5	31	3	4.2	1.55	1205K 2205K	22205K	H205 H305	HE205 HE305	SR52X5 SR52X7	2 1
SN506	25	1	62	185	52	22	30	50	77	90	150	M12	15	20	26.5	38	4	5.4	1.95	1206K 2206K	22206K	H206 H306	HE206 HE306	SR62X7 SR62X10	2 1
SN507	30	1⅛	72	185	52	22	33	50	82	95	150	M12	15	20	31.5	43	4	5.4	2.15	1207K 2207K	22207K	H207 H307	HE207 HE307	SR72X8 SR72X10	2 1
SN508	35	1¼	80	205	60	25	33	60	85	110	170	M12	15	20	36.5	48	4	5.4	3.2	1208K 2208K	22208K	H208 H308	HE208 HE308	SR80X7.5 SR80X10	2 1
SN509	40	1½	85	205	60	25	31	60	85	112	170	M12	15	20	41.5	53	4	5.4	3.45	1209K 2209K	22209K	H209 H309	HE209 HE309	SR85X6 SR85X8	2 1
SN510	45	1¾	90	205	60	25	33	60	90	115	170	M12	15	20	46.5	58	4	5.4	3.6	1210K 2210K	22210K	H210 H310	HE210 HE310	SR90X6.5 SR90X10	2 1
SN511	50	2	100	255	70	28	33	70	95	130	210	M16	18	23	51.5	67	5	6.9	5.19	1211K 2211K	22211K	H211 H311	HE211 HE311	SR100X6 SR100X8	2 1
SN512	55	2⅛	110	255	70	30	38	70	105	135	210	M16	18	23	56.5	72	5	6.9	5.39	1212K 2212K	22212K	H212 H312	HE212 HE312	SR110X8 SR110X10	2 1
SN513	60	2¼	120	275	80	30	43	80	110	150	230	M16	18	23	62	77	5	6.8	7.1	1213K 2213K	22213K	H213 H313	HE213 HE313	SR120X10 SR120X12	2 1
SN515	65	2½	130	280	80	30	41	80	115	155	230	M16	18	23	67	82	5	6.8	7.4	1215K 2215K	22215K	H215 H315	HE215 HE315	SR130X8 SR130X10	2 1
SN516	70	2¾	140	315	90	32	43	95	120	175	260	M20	22	27	72	89	6	8.1	9.5	1216K 2216K	22216K	H216 H316	HE216 HE316	SR140X8.5 SR140X10	2 1
SN517	75	3	150	320	90	32	46	95	125	185	260	M20	22	27	77	94	6	8.1	10.5	1217K 2217K	22217K	H217 H317	HE217 HE317	SR150X9 SR150X10	2 1
SN518	80	3¼	160	345	100	35	62.4	100	145	195	290	M20	22	27	82	99	6	8.1	13.4	1218K 2218K	22218K	H218 H318 H2318	HE218 HE318 HE2318	SR160X16.2 SR160X11.2 SR160X10	2 1 1
SN519	85	–	170	345	100	35	53	112	140	210	290	M20	22	27	87	104	6	8.1	15.6	1219K 2219K	22219K	H219 H319	HE219 HE319	SR170X10.5 SR170X10	2 1
SN520	90	3½	180	380	110	40	70.3	112	160	218	320	M24	26	32	92	111	7	9.3	19	2220K	22220K 23220K	H220 H320	HE320 HE2320	SR180X12.1 SR180X10	2 1
SN522	100	4	200	410	120	45	80	125	175	240	350	M24	26	32	102	125	8	10.8	21.6	2222K	22222K 23222K	H222 H3222	HE322 HE2322	SR200X13.5 SR200X10	2 1
SN524	110	4¼	215	410	120	45	86	140	185	270	350	M24	26	32	113	135	8	10.7	29.1		22224K 23224K	H3124 H2324	HE3124 HE2324	SR215X14 SR215X10	2 1
SN526	115	4½	230	445	130	50	90	150	190	290	380	M24	28	36	118	140	8	10.7	32		22226K 23226K	H3126 H2326	HE3126 HE2326	SR230X13 SR230X10	2 1
SN528	125	5	250	500	150	50	98	150	205	305	420	M30	33	42	128	154	9	12.2	40		22228K 23228K	H3128 H2328	HE3128 HE2328	SR250X15 SR250X10	2 1
SN530	135	5¼	270	530	160	60	106	160	220	325	450	M30	33	42	138	164	9	12.2	49.3		22230K 23230K	H3130 H2330	HE3130 HE2330	SR270X16.5 SR270X10	2 1
SN532	140	5½	290	550	160	60	114	170	235	345	470	M30	33	42	143	173	10	13.7	56.5		22232K 23232K	H3132 H2332	HE3132 HE2332	SR290X17 SR290X10	2 1