SSUCF..A All stainless steel flange 4-bolt and inch-based housing,Setscrew locking



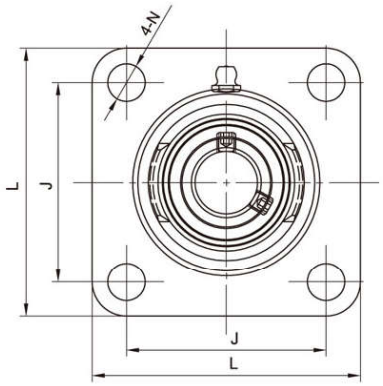

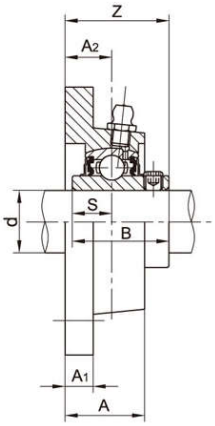

• Solid Base

Unit No.	Shaft Dia d		Dimensions(mm)									Bolt Size (mm)	Weight (kg)
	(in)	(mm)	L	J	A_2	A_1	A	N	Z	B	S		
SSUCF204A		20	86	64	15	11	25.5	12	33.3	31	12.7	M10	0.71
204-12A	3/4												
SSUCF205A		25	95	70	16	13	28	12	35.8	34.1	14.3	M10	0.97
205-14A	7/8												
205-15A	15/16												
205-16A	1												
SSUCF206A		30	108	83	18	13	31	12	40.2	38.1	15.9	M10	1.41
206-17A	1-1/16												
206-18A	1-1/8												
206-19A	1-3/16												
206-20A	1-1/4												
SSUCF207A		35	117	92	19	15	34	14	44.4	42.9	17.5	M12	1.86
207-20A	1-1/4												
207-21A	1-5/16												
207-22A	1-3/8												
207-23A	1-7/16												
SSUCF208A		40	130	102	21	15	36	16	51.2	49.2	19	M14	2.30
208-24A	1-1/2												
208-25A	1-9/16												
SSUCF209A		45	137	105	22	16	38	16	52.2	49.2	19	M14	2.71
209-26A	1-5/8												
209-27A	1-11/16												
209-28A	1-3/4												
SSUCF210A		50	143	111	22	16	40	16	54.6	51.6	19	M14	2.93
210-30A	1-7/8												
210-31A	1-15/16												
210-32A	2												
SSUCF211A		55	162	130	25	18	43	19	58.4	55.6	22.2	M16	4.13
211-32A	2												
211-34A	2-1/8												
211-35A	2-3/16												
SSUCF212A		60	175	143	29	18	48	19	68.7	65.1	25.4	M16	5.51
212-36A	2-1/4												
212-38A	2-3/8												
212-39A	2-7/16												

Notes:1.Upon request,available with plastic close cap(CC) or open cap(OC) at one end. Ordering example SSUCF204-12A CC.
2.Back seal is available when mounted with narrow inner ring SSB/SSA inserts.
3.Hand polishing surface housing available upon request. Ordering example SSUCF204-12A HP.
4.Lubricated with food grade grease.