LDK® Adapter Sleeves

AH/AHX200(300,2300,3000) Series Quit Sleeves



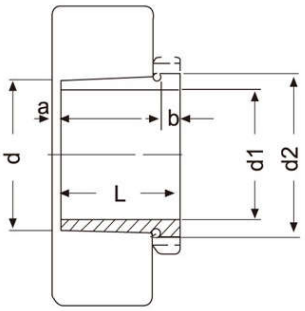

AH,AHX

Quit Sleeve

Item No.	d	d1	L	b	a	d2	Weight (kg)
AH208	40	35	25	6	2	M45x1.5	0.081
AH209	45	40	26	6	3	M50x1.5	0.095
AH210	50	45	28	7	3	M55x2	0.114
AH211	55	50	29	7	3	M60x2	0.132
AH212	60	55	32	8	3	M65x2	0.161
AH213	65	60	32.5	8	3.5	M75x2	0.213
AH214	70	65	33.5	8	3.5	M80x2	0.240
AH215	75	70	34.5	8	3.5	M85x2	0.259
AH216	80	75	35.5	8	3.5	M90x2	0.284
AH217	85	80	38.5	9	3.5	M95x2	0.314
AH218	90	85	40	9	4	M100x2	0.351
AH219	95	90	43	10	4	M105x2	0.403
AH220	100	95	45	10	4	M110x2	0.481
AH222	110	105	50	11	4	M120x3	0.547
AH224	120	115	53	12	4	M130x2	0.679
AH226	130	125	53	12	4	M140x2	0.725
AH228	140	135	56	13	5	M150x2	0.818
AH230	150	145	60	14	5	M160x3	0.963
AH232	160	150	64	15	5	M170x3	1.70
AH234	170	160	69	16	5	M180x3	1.98
AH236	180	170	69	16	5	M190x3	2.14
AH238	190	180	73	17	5	Tr205x4	2.52
AH240	200	190	77	18	5	Tr215x4	2.87
AH244	220	200	85	18	6	Tr235x4	5.49
AH248	240	220	96	22	6	Tr260x4	7.34
AH252	260	240	105	23	6	Tr280x4	8.80
AH256	280	260	105	23	8	Tr300x4	9.42
AH308	40	35	29	6	3	M45x1.5	0.090
AH309	45	40	31	6	3	M50x1.5	0.109
AH310	50	45	35	7	3	M55x2	0.137
AH311	55	50	37	7	3	M60x2	0.161
AH312	60	55	40	8	3	M65x2	0.189
AH313	65	60	42	8	3	M75x2	0.253
AH314	70	65	43	8	4	M80x2	0.280
AH315	75	70	45	8	4	M85x2	0.313
AH316	80	75	48	8	4	M90x2	0.365
AH317	85	80	52	9	4	M95x2	0.429
AH318	90	85	53	9	4	M100x2	0.461
AH319	95	90	57	10	4	M105x2	0.532
AH320	100	95	59	10	4	M110x2	0.582
AHX322	110	105	63	12	4	M120x2	0.663
AHX324	120	115	69	13	4	M130x2	0.866
AHX326	130	125	74	14	4	M140x2	1.02
AHX328	140	135	77	14	5	M150x2	1.16
AHX330	150	145	83	15	5	M165x3	1.50
AHX332	160	150	88	16	5	M180x3	2.69
AHX334	170	160	93	17	5	M190x3	3.07
AHX2308	40	35	40	7	3	M45x1.5	0.128
AHX2309	45	40	44	7	3	M50x1.5	0.164

Quit Sleeve

Item No.	d	d1	L	b	a	d2	Weight (kg)
AHX2310	50	45	50	9	3	M55x2	0.209
AHX2311	55	50	54	10	3	M60x2	0.253
AHX2312	60	55	58	11	3	M65x2	0.297
AHX2313	65	60	61	12	3	M75x2	0.395
AHX2314	70	65	64	12	4	M80x2	0.466
AHX2315	75	70	68	12	4	M85x2	0.534
AHX2316	80	75	71	12	4	M90x2	0.597
AHX2317	85	80	74	13	4	M95x2	0.670
AHX2318	90	85	79	14	4	M100x2	0.779
AHX2319	95	90	85	16	4	M105x2	0.886
AHX2320	100	95	90	16	4	M110x2	0.998
AHX2322	110	105	98	16	4	M125x2	1.35
AHX2324	120	115	105	17	4	M135x2	1.60
AHX2326	130	125	115	19	4	M145x2	1.97
AHX2328	140	135	125	20	5	M155x3	2.33
AHX2330	150	145	135	24	5	M165x3	2.82
AHX2332	160	150	140	24	6	M180x3	4.72
AHX2334	170	160	146	24	6	M190x3	5.25
AHX2336	180	170	154	26	6	M200x3	5.83
AHX2338	190	180	160	26	7	Tr210x4	6.63
AHX2340	200	190	170	30	7	Tr220x4	7.54
AHX2344	220	200	181	30	8	Tr240x4	13.5
AHX2348	240	220	189	30	8	Tr260x4	15.5
AHX2352	260	240	205	30	8	Tr290x4	19.6
AHX2356	280	260	212	30	8	Tr310x5	21.6
AHX3024	120	115	60	13	4	M130x2	0.750
AHX3026	130	125	67	14	4	M140x2	0.930
AHX3028	140	135	68	14	5	M150x2	1.01
AHX3030	150	145	72	15	5	M160x3	1.15
AH3032	160	150	77	16	5	M170x3	2.06
AH3034	170	160	85	17	5	M180x3	2.43
AH3036	180	170	92	17	6	M190x3	2.81
AH3038	190	180	96	18	6	Tr205x4	3.32
AH3040	200	190	102	19	6	Tr215x4	3.80
AH3044	220	200	111	20	6	Tr235x4	7.40
AH3048	240	220	116	21	7	Tr260x4	8.75
AH3052	260	240	128	23	7	Tr280x4	10.7
AH3056	280	260	131	24	8	Tr300x4	12.0
AH3060	300	280	145	26	8	Tr320x5	14.4
AH3064	320	300	149	27	8	Tr345x5	16.0
AH3068	340	320	162	28	9	Tr365x5	19.5
AH3072	360	340	167	30	9	Tr385x5	21.0
AH3076	380	360	170	31	10	Tr410x5	23.2
AH3080	400	380	183	33	10	Tr430x5	27.3
AH3084	420	400	186	34	10	Tr450x5	29.0
AH3088	440	420	194	35	11	Tr470x5	32.0
AH3092	460	440	202	37	11	Tr490x5	35.2
AH3096	480	460	205	38	12	Tr520x6	39.2

http://www.ldk-bearings.com