SSUCP..ESB All stainless steel pillow blocks,Solid base housing,Setscrew locking



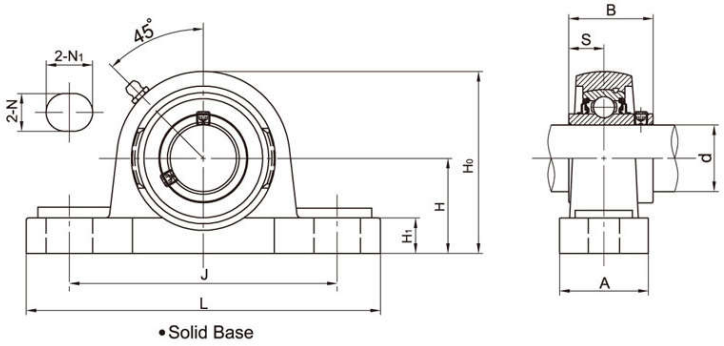

• Solid Base

Unit No.	Shaft Dia d		Dimensions(mm)										Bolt Size (mm)	Weight (kg)
	(in)	(mm)	H	L	J	A	N	N1	H1	H0	B	S		
SSUCP204ESB		20	33.3	127	95	38	13	19	15	64	31	12.7	M10	0.79
204-12ESB	3/4													
SSUCP205ESB		25	36.5	140	105	38	13	19	16.5	70	34.1	14.3	M10	0.95
205-14ESB	7/8													
205-15ESB	15/16													
205-16ESB	1													
SSUCP206ESB		30	42.9	165	121	48	17	21	18	82	38.1	15.9	M12	1.49
206-17ESB	1-1/16													
206-18ESB	1-1/8													
206-19ESB	1-3/16													
206-20ESB	1-1/4													
SSUCP207ESB		35	47.6	167	127	48	17	21	19	92	42.9	17.5	M12	1.93
207-20ESB	1-1/4													
207-21ESB	1-5/16													
207-22ESB	1-3/8													
207-23ESB	1-7/16													
SSUCP208ESB		40	49.2	184	137	54	17	22	19	99	49.2	19	M12	2.26
208-24ESB	1-1/2													
208-25ESB	1-9/16													
SSUCP209ESB		45	54	190	146	54	17	22	20	108	49.2	19	M12	2.76
209-26ESB	1-5/8													
209-27ESB	1-11/16													
209-28ESB	1-3/4													
SSUCP210ESB		50	57.2	206	159	60	20	25	22	112	51.6	19	M16	3.31
210-30ESB	1-7/8													
210-31ESB	1-15/16													
210-32ESB	2													
SSUCP211ESB		55	63.5	219	171	60	20	25	23	124	55.6	22.2	M16	3.98
211-32ESB	2													
211-34ESB	2-1/8													
211-35ESB	2-3/16													
SSUCP212ESB		60	69.9	238	184	70	20	25	25	137	65.1	25.4	M16	5.42
212-36ESB	2-1/4													
212-38ESB	2-3/8													
212-39ESB	2-7/16													

Notes:1. Grease fittings also available at 90° positions.

2. Upon request,available with plastic close cap(CC) or open cap(OC) at one end or both ends.
   Ordering example: SSUCP204-12ESB CC.

3. Lubricated with food grade grease.