

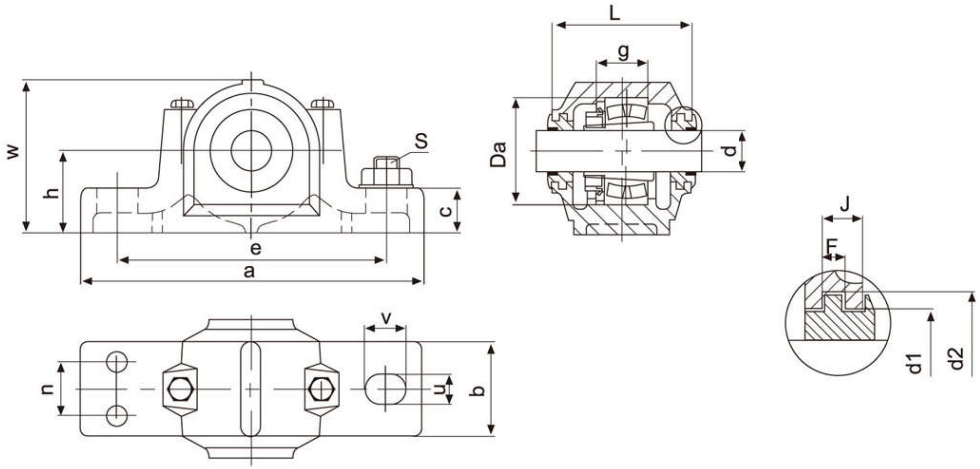

Housing No.	Shaft dia.	Dimensions (mm)																		Housing Wt Kg	Bearing No	Adapter Sleeve	Locating Ring	
		H H12	a	e	b	u	v	c	w	L	d_1 H12	d_2 H12	n	J	F	g H12	Da H8	S (2)	S (4)				Number	QTY
SNG507-606	30	50	185	150	52	13	20	22	92	82	46.5	54.5		7.5	5	34	72	M10		2.6	1207K 22207K	H207 H307	SR72x8.5 SR72x5.5	2 2
SNG508-607	35	60	205	170	60	15	20	25	106	85	51.5	59.5		7.5	5	39	80	M12		3.2	1208K 22208K	H208 H308	SR80x10.5 SR80x8	2 2
SNG509	40	60	205	170	60	15	20	25	109	85	56.9	64.9		8.5	5	30	85	M12		3.6	1209K 22209K	H209 H309	SR85x5.5 SR85x7	2 1
SNG510-608	45	60	205	170	60	15	20	25	112	90	62	70.5		8.5	5	41	90	M12		3.9	1210K 22210K	H210 H310	SR90x10.5 SR90x9	2 2
SNG511-609	50	70	255	210	70	18	23	28	127	95	67	75.5	35	8.5	5	44	100	M16		5.2	1211K 22211K	H211 H311	SR100x11.5 SR100x9.5	2 2
SNG512-610	55	70	255	210	70	18	23	30	133	105	72	80.5	35	8.5	5	48	110	M16	M12	6.7	1212K 22212K	H212 H312	SR110x13 SR110x10	2 2
SNG513-611	60	80	275	230	80	18	24	30	148	110	77	85.5	35	8.5	5	51	120	M16	M12	7.9	1213K 22213K	H213 H313	SR120x14 SR120x10	2 2
SNG515-612	65	80	280	230	80	18	26	32	154	115	87	95.5	40	8.5	5	56	130	M16	M12	8.6	1215K 22215K	H215 H315	SR130x15.5 SR130x12.5	2 2
SNG516-613	70	95	315	260	90	22	29	32	175	120	92.5	101	40	10.5	5	58	140	M20	M12	11.0	1216K 22216K	H216 H316	SR140x16 SR140x12.5	2 2
SNG517	75	95	320	260	90	22	30	35	181	125	97.5	106	50	10.5	5	61	150	M20	M12	12.0	1217K 22217K	H217 H317	SR150x16.5 SR150x12.5	2 2
SNG518-615	80	100	345	290	100	22	27	35	192	140	102.5	111	50	10.5	5	65	160	M20	M16	15.0	1218K 22218K 23218K	H218 H318 H2318	SR160x17.5 SR160x12.5 SR160x12.5	2 2 1
SNG519-616	85	112	345	290	100	22	27	40	209	145	131	141	50	11.5	6	68	170	M20	M16	16.0	1219K 22219K	H219 H319	SR170x18 SR170x12.5	2 2
SNG520-617	90	112	380	320	110	26	32	45	215	160	137.5	147.5	60	11.5	6	70	180	M24	M16	18.0	1220K 22220K 23220K	H220 H320 H2320	SR180x18 SR180x12 SR180x9.7	2 2 1
SNG522-619	100	125	410	350	120	26	32	45	239	175	147.5	157.5	70	11.5	6	80	200	M24	M16	28.0	1222K 22222K 23222K	H222 H322 H2322	SR200x21 SR200x13.5 SR200x10.2	2 2 1
SNG524-620	110	140	410	350	120	26	32	45	271	185	157.5	167.5	70	11.5	6	86	215	M24	M16	36.0	22224K 23224K	H3124 H2324	SR215x14 SR215x10	2 1
SNG526	115	150	445	380	130	28	35	50	290	190	167.5	177.5	70	13	6	90	230	M24	M20	47.0	22226K 23226K	H3126 H2326	SR230x13 SR230x10	2 1
SNG528	125	150	500	420	150	35	42	50	302	205	177.5	187.5	80	13	6	98	250	M30	M24	49.0	22228K 23228K	H3128 H2328	SR250x15 SR250x10	2 1
SNG530	135	160	530	450	160	35	42	60	323	220	192.5	202.5	90	13.5	6	106	270	M30	M24	57.0	22230K 23230K	H3130 H2330	SR270x16.5 SR270x10	2 1
SNG532	140	170	550	470	160	35	42	60	344	235	202.5	212.5	90	13.5	6	114	290	M30	M24	64.0	22232K 23232K	H3132 H2332	SR290x17 SR290x10	2 1