Accessories:End-covers,Back seal



TP-BS



TP-OC



TP-CC

Plastic Covers: Open/Close Type (OC / CC)

Shaft diameter		Dimensions(mm)						
mm	inch	K	N	L	M	D	B	b
12	1/2	32	7	23	50	52	6	3
15	9/16 5/8	32	7	23	50	52	6	3
17	11/16	32	7	23	50	52	6	3
20	3/4	32	7	23	50	52	6	3
25	13/16 14/16 15/16 1	37	7	25	55	62	6	3
30	1 1/16 1 1/8 1 3/16 1 1/4	42	7	30	64	72	6	3
35	1 1/4 1 5/16 1 3/8 1 7/16	47	7	32	74.5	82	6	3
40	1 1/2 1 9/16	52	7	57	84	88	6	3
45	1 5/8 1 11/16 1 3/4	57	7	41	89	93	6	3
50	1 13/16 1 7/8 1 15/16 2	62	7	47	94	98	6	3
55	2 2 1/8 2 3/16	67	7	49	102	108	6	3
60	2 1/4 2 3/8 2 7/16	72	7	48	116	116	6	3

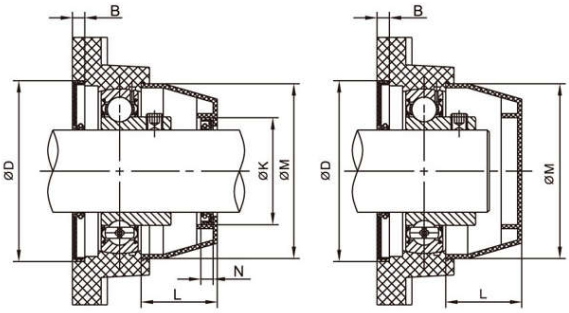

• Flange Units

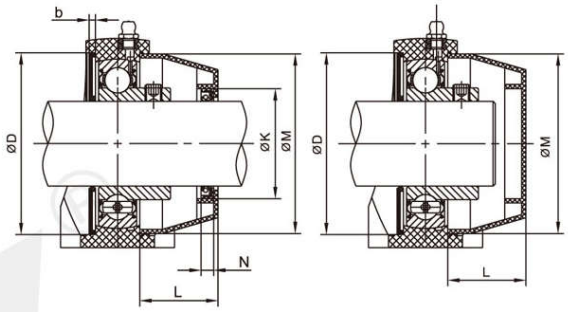

• Pillow Block Units

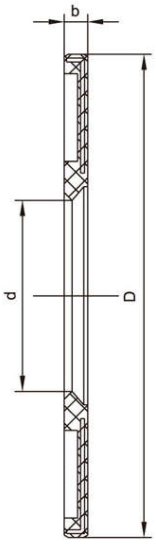

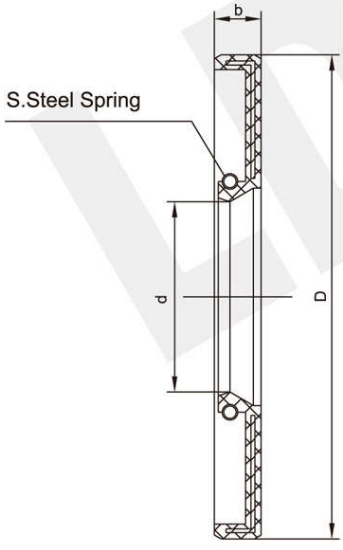

BACK SEALS

DIM / SIZE	FOR P T PA HOUSING			FOR F FL FB HOUSING		
	d	b	D	d	b	D
BS204	20	3	52	20	6	52
BS205	25	3	56	25	6	62
BS206	30	3	66	30	6	72
BS207	35	3	76	35	6	82
BS208	40	3	86	40	6	88
BS209	45	3	90	45	6	93
BS210	50	3	96	50	6	98
BS211	55	3	107	55	6	108
BS212	60	3	116	60	6	116

Notes: End caps and back seal could be ordered separately, Ordering example: TP-CC205,TP-OC205, TP-BS205. Upon request Anti-Bacteria Protection Series is available by adding prefix"AB" as designation.Ordering example:ABTP-OC205